Semiconductor Physics, Quantum Electronics & Optoelectronics. 2001. V. 4, N 3. P. 192-195.

PACS: 77.84.B

Refractory contact to α-SiC produced by laser technology methods

L.L. Fedorenko, V.S. Kiseleov, S.V. Svechnikov, M.M. Yusupov, G.V.Beketov
Institute of Semiconductor Physics NAS Ukraine, 45, Prospect Nauki, Kyiv 03028, Ukraine

Abstract. Developed in the paper are method and technological scheme to obtain ohmic contacts (OC) to α-SiC(:*N*), $N_d - N_a$ ~1÷3.10^{18} cm^{-3} by pulse laser deposition (PLD) of multilayer structures Ni/W/Si_3N_4/W and the following laser annealing (LA). When using an YAG:Nd^{3+} laser, threshold levels and optimal regimes for laser induced diffusion and laser annealing of contacts were determined. It is shown that the Q-switched regime with combined exposure of the fundamental (λ = 1.06 μm) and second (λ = 0.53 μm) harmonics are found as optimal for obtaining minimal contact resistance when YAG:Nd^{3+} laser is used. It is shown that the threshold levels of visual by observed irreversible changes in contact resistance coincide with those of current-voltage characteristics (CVC) and is found to lie in the range area P_{thCV} = = (3÷8)·10^7 W·cm^{-2} in dependence on thickness of deposited metal layers. The phase transition existence has been established in the process of laser induced modification and annealing on the basis of observed changes in the CVC character and results of surface investigations by Atomic Force Microscopy (AFM). Typical values of resistivity ρ_c of non-fused OC obtained to α-SiC based on Ni/W/Si_3N_4/W structures were close to the value ρ_c ~ (3÷4)·10^{-4}W·cm^2. The contact withstood the current density 10^4 A·cm^{-2} for 100 hours.

Keywords: SiC, refractory ohmic contact, laser

Paper received 27.04.01; revised manuscript received 04.07.01; accepted for publication 13.07.01.

1. Introduction

An essential success is recently achieved in methods of manufacturing α-SiC monocrystals suitable for chip production significantly increase urgency of the problem of OC formation on to α-SiC layers. One of the most important advantages of SiC devices is a high operation temperature. This is due to the fact that the intrinsic carrier density does not exceed 10^{14} cm^{-3} at 1300 K in 6H α-SiC and at 1100 K in β-SiC [1] because of the wide band gap, i.e. a *p-n* junction can exist up to these high temperatures. The latter defines demands to stability and mechanical strength of OC to SiC layers in a wide temperature range. At the same time, they must satisfy all other demands established for ohmic contacts to semiconductor devices on base of traditional Si, Ge and GaAs. Such contacts must have minimal transition resistance and linear current-voltage characteristics in operation current and temperature ranges, be plastic, as well as provide sufficiently small thickness of interface and its flat front when ohmic structure is formed. The latter is of great significance for submicron sizes required for chips.

We may maintain that at the present technology of contacts formation, at least, the ohmic ones, essentially remains behind the level corresponding to possibilities of initial material. Known data of ohmic contacts to SiC specific resistance ρ_c, Table 1 [1], show that average value of ρ_c is two-three order higher than obtained for GaAs.

The problem of refractory ohmic contact formation consists in metallurgical and electrophysical factors. The metallurgical one is caused by the tendency of refractory metals (such as Mo, Ti, W) to form silicides at prolonged high temperature processes, wich causes occurrence of carbon excess that significantly deteriorates mechanical properties of the contact. The electrophysical one is connected with the existing disorder of absolute value for both work function Ψ of mentioned above metals and chemical potential χ of various SiC polytypes that prevents to predict parameters of the contact potential barrier as its character will be determined by contact pair selection and technological factors.

In accord with stated above, one may conclude that for fabrication refractory submicron ohmic contact to SiC with sharp interface the dominating of tunnel mechanism

Table 1

Semiconductor	Metal system	Specific resistance ρ_c, ($\Omega\cdot$ cm^2)
n-type β-SiC	Au/Ta	2×10^{-3}
	Au/W	8×10^{-4}
	Au/Ti	1×10^{-3}
	Au/Ni	2×10^{-3}
	W	8×10^{-2}
n-type 6H α-SiC	Al/W	1×10^{-4}
	Ni, Cr	3×10^{-4}
p-type 6H α-SiC	Al/W-Au/W/Al	2×10^{-4}

of a current flow path through energy barrier is necessary. It could be achieved using high temperature technological processes of short duration and local affection. These requirements are mainly satisfied by laser technology (LT) methods.

In spite of considerable amount of publications devoted to application of LT for fabrication of semiconductor contact structures, only a few of them (see for instance [2,3]) are devoted to ohmic contact formation to SiC by LT methods. So, Pihtin et al [4] have reported about preparation of fused OC to SiC by contact material diffusion in the course of YAG:Nd^{3+} laser millisecond exposure. Kalinina et al. [5] have reached 40 % decreasing of Cr/n-SiC ohmic contact resistance, these being, formed by thermal resistive deposition Cr layer with thikness 0.1–0.2 μm on heated substrate with the following annealing by single pulses of a picosecond YAG:Nd^{3+} laser ($\lambda = 1.06$ μm, $t_p = 30$ ps) with passive mode synchronization. Chosen regimes of PLD in given examples were, as we consider, not optimal. In the first case; laser milisecond pulse resulted in very deep (up to 10 mm) heating the structure, and in the second case; a picosecond pulse, due to very high non-eqilibrium degree of the process, resulted in increased presence of defects.

In our case the tunnel mechanism of current flow was ensured by formation of an increased level of near-surface n^+ -layer doping of n-α-SiC by laser induced diffusion from solid phase source of dopant, wich was the same as in basic material, and submicron character as well as sharp interface were provided by nanosecond pulses of YAG:Nd^{3+} laser with the Q-switch regime.

2. Experimental cases

Ohmic contacts to α-SiC:N ($N_d - N_a = 1\div3\cdot10^{18}$ cm^{-3}) monocrystals grown by the Lely method were formed using an base of initial Ni/W/Si$_3$N$_4$/W/a-SiC structure (Fig. 1) by laser-induced diffusion of N impurity from solid phase source – nanometer Si$_3$N$_4$ film. Here Si serves for compensation of the possible losses of Si from SiC substrate under exposure of the high annealing temperature. Thin W layer deposited directly on SiC fulfilled stabilization function of interface and, except that, served as semi-transparent shield for dopant N diffusion into SiC. The upper W layer had triple function: i) as a source of heating due to large absorption of the laser radiation; ii) as a capsulated layer limiting evaporation of the Si$_3$N$_4$ layer because of it dissociation; iii) as acontact metal layer. The initial nanometer structure was obtained by pulse laser deposition method on hot substrate T~200°C by an YAG:Nd^{3+} laser operated in the Q-switch regime ($\lambda = 1.06$ μm, $t_p = 2\cdot10^{-8}$ sec, $E = 0.1$ J) and repetition frequencies $f = 25$, 50 Hz. The α-SiC:N substrate were located in vacuum chamber at operating pressure about 10^{-6} Torr. Nanometer layers were deposited through a fermico masks with the topology for the four-probe measurement technique of the specific contact resistance. The deposition velocity was controlled by the laser radiation intensity as well as its frequency f, and the absence of dropshape clusters was achieved on the surface of structure by adjustment of the automatic scanning velocity of the laser spot on a target surface with the f value. The film thickness was determined by laser pulses number counting on specific thickness (per pulse). It was deduced from the total thickness of the film formed after a fixed number of pulses large enough for microinterferometer determin ($\delta \geq 2000$ A).The following diffusion of dopant and laser annealing were performed in laser modification apparatus by YAG:Nd^{3+} laser operated in the Q-switch regime on two wavelengths: the fundamental ($\lambda =$ $= 1.06$ μm) and double ($\lambda = 0.53$ μm) harmonics. The process of structure modification was controlled by pyroelectric thermal method in real time and by visualization on microscope.

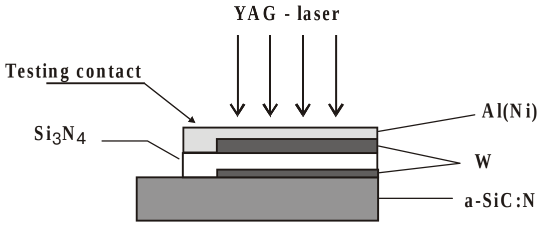

Fig. 1. The contact structure.

The experimental set-up (Fig. 2) includes: YAG:Nd^{3+} laser 1 operating in the Q-switch regime ($t_p = 10 \div 65$ ns) with pulse energy $P_p = 200$ J$\cdot$cm^{-2}; photodetector 2; focusing system 3,4; pyroelectrical control system 6 of the temperature of laser irradiated region of the sample 5 and visualizer 12.

The evolution of contact ohmic resistance during the process of laser modification was controlled by oscillograph operated in two-beam sweep regime. The resistivity of contacts ρ_c were measured by four-probe technique. The morphology of structure surface has been studied using Atomic Force Microscopy (AFM) by Nanoscope III a Scanning Probe Microscope (Digital Instruments).

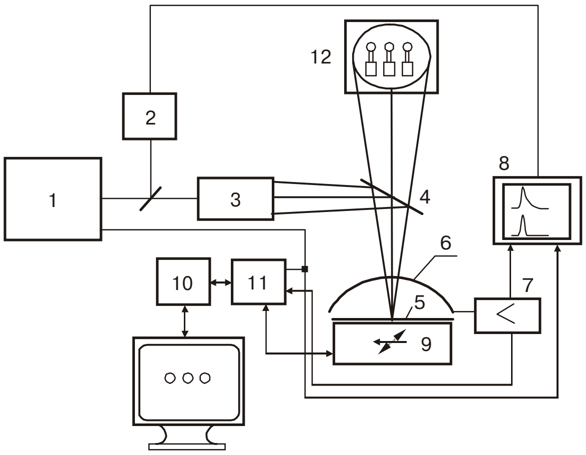

Fig. 2. The experimental set-up

3. Results and discussion

The Q-switch regime (t_p =10 ns) with repetition frequency f = 25 Hz and average linear velocity of laser beam scanning on target surface 6 mm·sec^{-1} at intensity $P = 3\times10^9$ W·cm^{-2} was found to be optimal when used is an YAG: Nd^{3+} laser ($\lambda = 1.06$ μm). Such parameters correspond to explosive regime of laser exposure and minimal density of dropshape clusters on the surface of substrate [6].

The evolution of current-voltage characteristics from a diode type to the ohmic one depending on pulse number in the process of laser annealing is shown in Fig. 3. As one can see, practically full linearization of investigated structure CVC was attained after 8-9 YAG:Nd^{3+} laser pulses at radiation intensity (7÷8)·10^7 W·cm^{-2}. The linear relation between resistance changing ΔR_c and applied to the system total energy of laser pulses has been established. The relation testifies first to accumulating character of process and secondly in favour of thermal model of the laser exposure. It is experimentally shown that the most effective regime when YAG:Nd^{3+} laser is used was pulse regime (τ_i = 10 ns) for both the fundamental ($\lambda = 1.06$ μm) and double ($\lambda = 0.53$ μm) harmonics of laser irradiation. The data obtained may be explained by the fact that there are «softening» of technological regime at combined exposure. As it is known, deposited films have essentially lesser absorptivity then monolith material has. It is possible that there is an additional preliminary before-threshold warm up of deeper layers of the structure by connected with the foregoing statement warming of the structure by the fundamental harmonic radiation ($\lambda = 1.06$ μm) and the longer pulse duration of the fundamental harmonic. That leads to softening of technological regime and decreasing of presence of defects degree.

The final contact resistance R_c dependence from Si_3N_4 layer thickness is shown in Fig. 4. Observable minimum of dependence $R_c(\delta_{Si_3N_4})$, might be explained by island character of Si_3N_4 layer formation process at PLD on falling part and on rising part- by presence of defects degree increasing in interface because of incomplete Si_3N_4 dissociation at bigger thickness and equal values of P. It is to say that P increasing at bigger δ values leads to small shift of the dependence to the right in the direction of δ_{Si3N4} increasing but minimum of the dependence also increases so that using of Si_3N_4 layers with thickness $\delta >$ > 400 Å is inexpedient. It is found that the threshold of visual observed changes of surface structure morphology P_{thV} in the experimental error range coincided with the beginning of irreversible current-voltage characteristic P_{thCV} changes and derives $P_{thCV} = 3÷8·10^7$ W·cm^{-2}. That testifies to phase transition existence, first, and, secondly, is an additional argument in favour of thermal model of laser exposure.

Fig. 5 shows results of investigations of surface morphology patterns by Atomic Force Microscopy during ohmic contact formation process. One can see an essential difference in surface conditions: a) initial SiC surface; b) after deposition of Ni/W/Si_3N_4/W/α-SiC structure; c) after laser exposure. The fact that it exists in cases b) and c) testifies to phase transition existence during LM process. We also do not exclude the surface packing effect that was observed at LE [7].

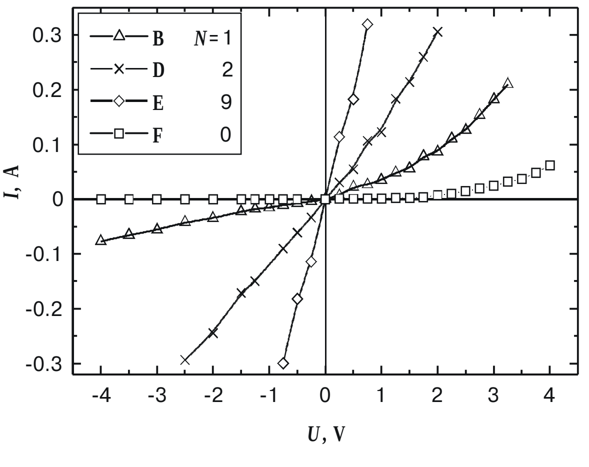

Fig. 3. Evolution of the I-V characteristics depending of number of laser pulses.

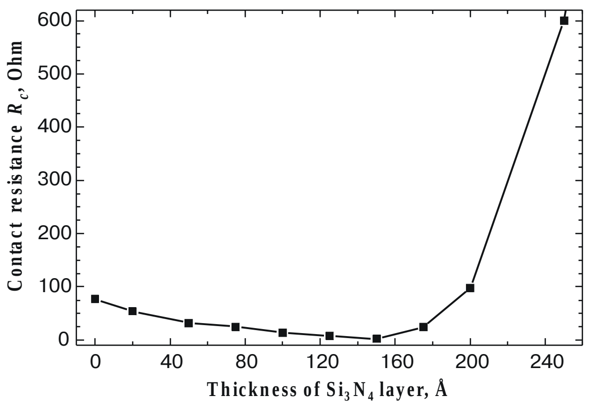

Fig. 4. Dependence of the contact resistance R_c on thickness d of the Si_3N_4 layer

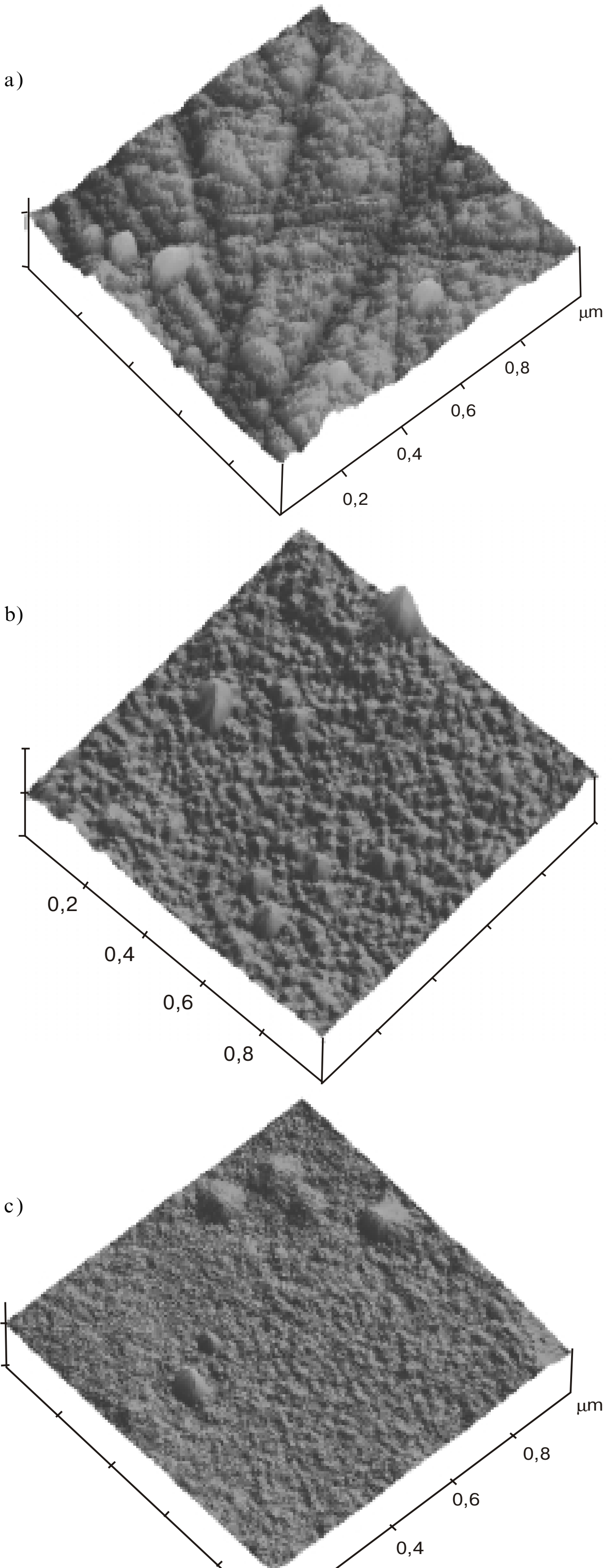

Fig. 5. Atomic force microscopy images: a) initial a-SiC surface b) Ni/W/Si_3N_4/W/α-SiC contact structure after pulse laser vacuum deposition c) Ni/W/Si_3N_4/W/α-SiC ohmic contact structure after laser modification

Typical values of specific resistance ρ_c of contact obtained using Ni/W/Si_3N_4/W/α-SiC structure were close to value $\rho_c \sim (3 \div 4) \cdot 10^{-4}\ \Omega \cdot cm^2$ after laser annealing and did not change in testing patterns at current density $j \sim 4 \cdot 10^3\ A \cdot cm^{-2}$ for 100 hours.

Conclusions

The possibility of ohmic contact formation with specific resistance value $\rho_c = 3 \div 5 \cdot 10^{-4}\ \Omega \cdot cm^2$ by radiation of an YAG:Nd^{3+} laser operating in the Q-switch regime was shown. The threshold of irreversible changes in current-voltage characteristics of Ni/W/Si_3N_4/W/α-SiC contact structure $P_{thCV} = 3 \div 8 \cdot 10^7\ W \cdot cm^{-2}$ under exposure by the YAG:Nd^{3+} laser operating in the Q-switch regime was found. This value coincides within error range with visual by observed changes of surface structure morphology P_{thV} and depends on a total thickness of metal layers. It was found that the most optimal regime was that of laser exposure at combined affection using both the fundumental (λ = 1.06 µm) and second (λ = 0.53 µm) harmonics in nanosecond range of pulse duration when the YAG:Nd^{3+} laser was used. Ohmic contacts based on Ni/W/Si_3N_4/W/α-SiC system have the following advantages:

- the absence of elements that essentially change chemical activity relatively to basic material with increasing temperature;
- the presence of tungsten requires no additional metalization for ensuring of interconnections;
- contacts are non-fused;
- contains no expensive metals (such as Au *etc*);
- high stability of the resistance of contacts with submicron contact sizes.

The further decreasing of contact resistance requires detailed investigations of laser induced microstructure transformations of α-SiC crystal lattice and dopant diffusion in conditions of higher temperature gradient generation [8].

References

1. P.A. Ivanov, V.E. Chelnokov, Recent development in SiC single - crystal electronics. // *Semicond. Sci. Technol.*, (7), pp. 863-880 (1992).
2. P. Sircar, Laser and furnace annealed Au, Ag ohmic contacts on n^+- GaAs. // *Rev. Phys. Appl.,* **22** (9), pp. 967-969 (1987).
3. S.V. Baranetz, S.P. Dikiy, L.L. Fedorenko, E.B. Kaganovich, S.V. Svechnikov, Thermal stable laser produced low-ohmical contact to nanometer p-GaAs layers of barrier structures for fast optoelectronics devices. // *Proc. SPIE, Optical Organic and Semiconductor Inorganic Materials*, **2968**, pp. 144-148 (1996).
4. A.N. Pihtin, V.A. Popov, D.A. Yaskov, Ohmic contacts to semiconductors obtained by laser. // *Sov. Phys. Tech. Sem.*, **3** (11), pp. 1646-1648 (1969).
5. E.V. Kalinina, Yu.V. Kovalchuk, G.V. Prischepa, Jo.V. Smolskiy, Influence of the ultrashort laser pulses on the electrophysical properties of silicon carbide. // *Sov. Journ. Tech. Phys. Lett.*, **11**(11), pp. 669-671 (1985).
6. I.G. Opachko, L.L. Shimon, B.Ya. Khomiak, Ion emision dynamics at resonance and non-resonance absorption of laser irradiation by plasma on solids surface. // *Ukr. Journ. Rhys. Invest.*, **1**(1), pp. 46-51 (1996).
7. V.A. Emelianov, N.N. Fedosenko, E.V. Shershnev, Laser method for obtaining densely packed structure of thin films. // *Sov. Laser technique and optoelectronic*, **3-4**, pp. 64-65 (1992).
8. K.K. Bourdel, A.S. Ahmanov, V.N. Makarov, A.Yu. Poroikov, A.V. Suvorov, N.G. Chechenin, Silicon carbide melting at eximer laser nanosecond pulses affection. // *Sov. Journ. Tech. Phys. Lett.*, **14** (13), pp. 1207-1211 (1988).